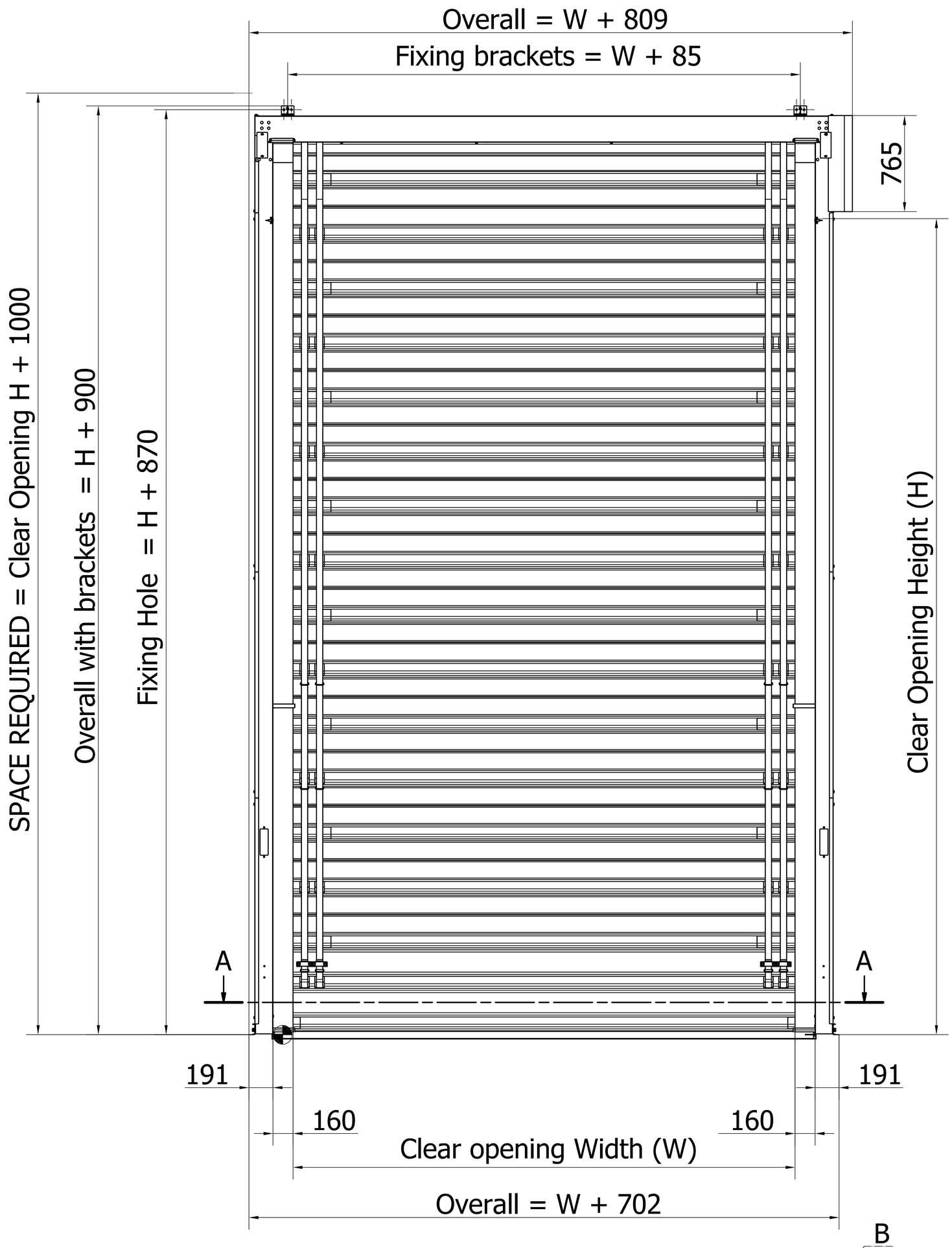

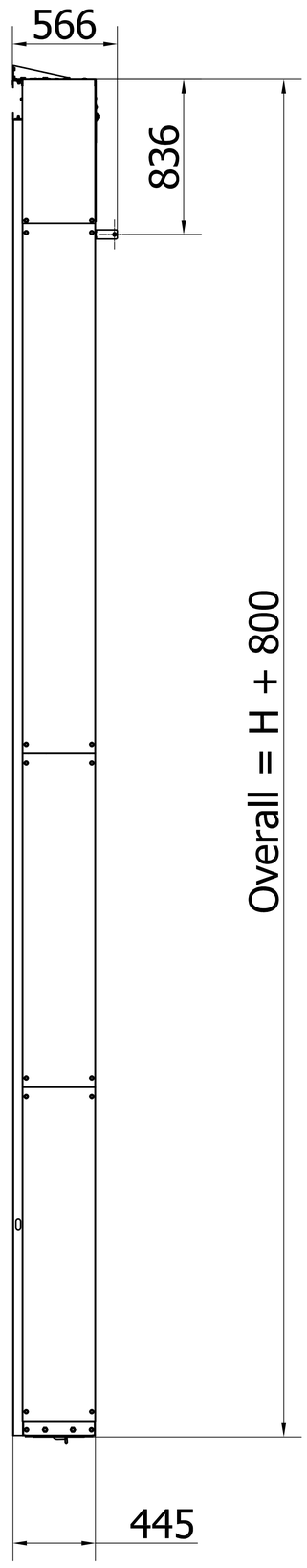

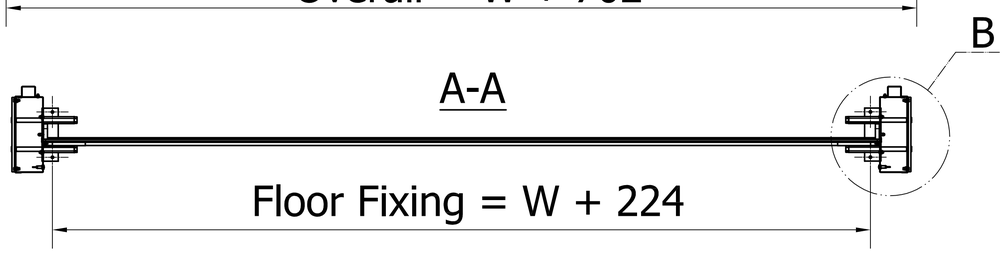

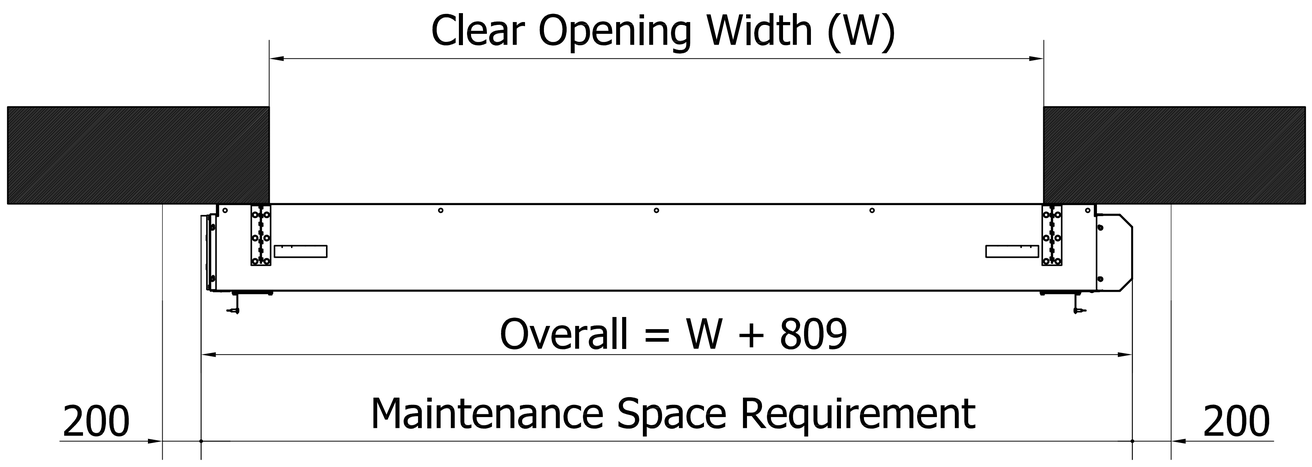

DETAIL B
drilling & fixing on the floor

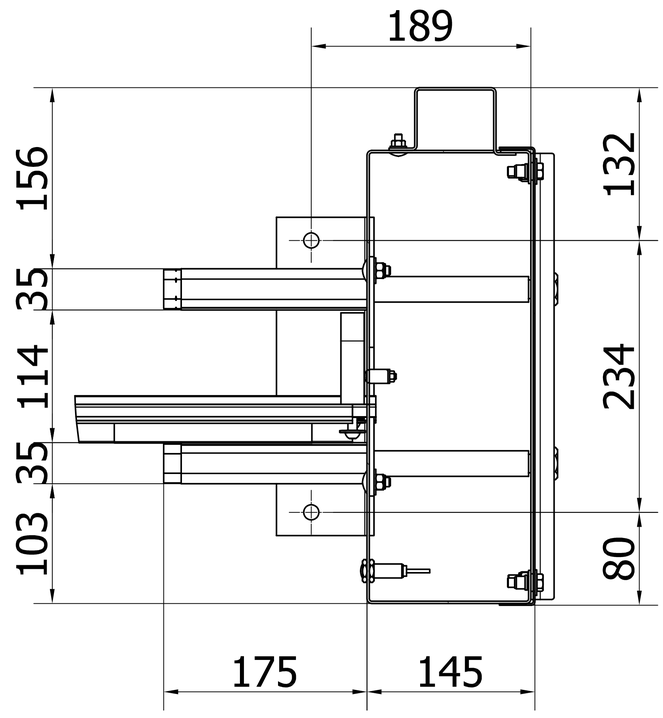

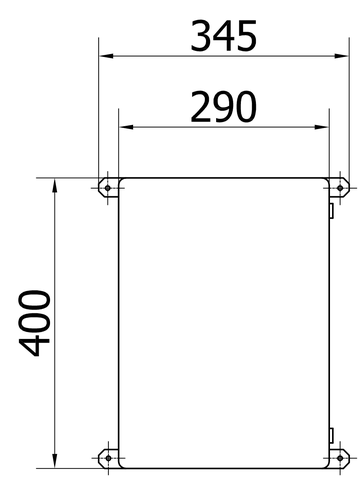

ABS control box = 190
HINGES ON THE LEFT , LOCK ON THE RIGHT

*400V 3-phases
or 230V 3-phases

*Door supply cable :
square 4G2.5
3 PHASES + earth
without neutral

*Head circuit breaker

*Either 16A curve C
or 10A curve AM

KONE		update on : update by : version :
DIMENSIONS AND SPACE REQUIREMENT WITHOUT COUNTERWEIGHT INSULATED CURTAIN Fold 50	made by : grinandjf	
	Date : 14/02/2017	page : 1/1
	Scale : fs	Paper Size : A2
	Drawing sheet : Fold 50	

Property of the company; using or duplicate without permission is forbiden.